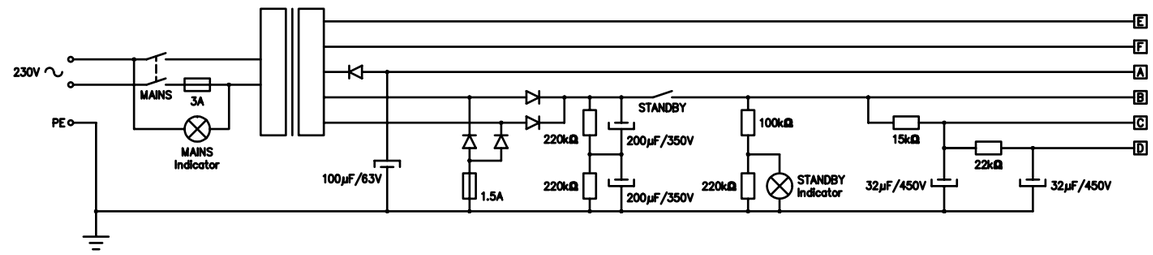

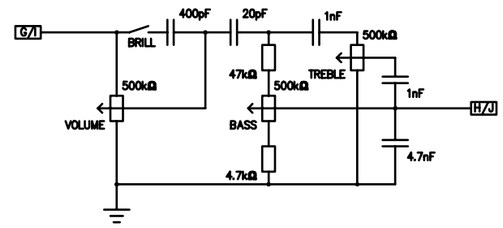

ECC83 ECC81 ECC83 ECC81 ECC83 EL34 EL34

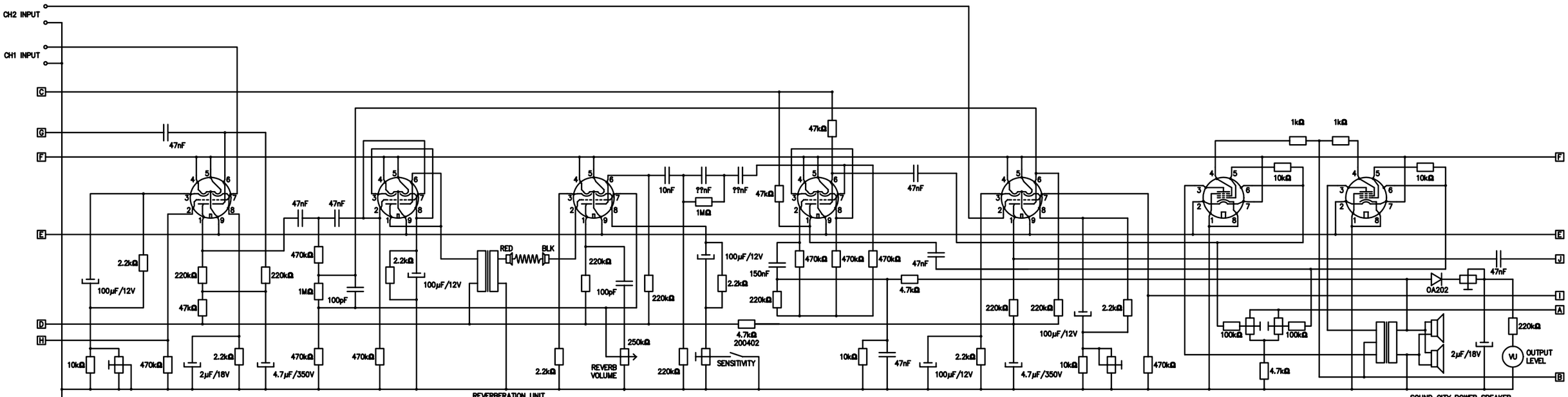

REVERBERATION UNIT
GIBBS SPECIAL PRODUCTS CORPORATION
JANESVILLE, WISCONSIN
SUBSIDIARY OF HAMMOND CORPORATION

SOUND CITY POWER SPEAKER
Model No – 122190
Flux Density – 14000
Power Handling – 40
Impedance – 15
Serial No – .